H2Ports

Implementing Fuel Cells and Hydrogen Technologies in Ports

Carlos Fúnez Guerra. Open Innovation Manager Division in National Hydrogen Centre. E-mail: carlos.funez@cnh2.es.

PCHET 2019

FUEL CELLS AND HYDROGEN JOINT UNDERTAKING

This project has received funding from the Fuel Cells and Hydrogen 2 Joint Undertaking under grant agreement No 826339. This Joint Undertaking receives support from the European Union's Horizon 2020 research and innovation programme, Hydrogen Europe and Hydrogen Europe research.

Index

01 Main characteristics

Objectives and impacts, General Overview, Partners, Port of Valencia

02 Use of H_2 at Ports

Port as a Hydrogen Valley, H2Ports: Material Handling

03 Activities

Project Structure, Hydrogen supply, FC Reach Stacker at MSC Valencia, FC 4x4 Yard Tractor at Grimaldi Terminal, Market uptake strategy and Risk Management, Planning

Objective and impacts

H2Ports aims to boost the transition of the European port industry towards an effective **low-carbon / zero – emission and safe operative model** by piloting and demonstrating new **Fuel Cell Technology**

Impacts at port-maritime industry

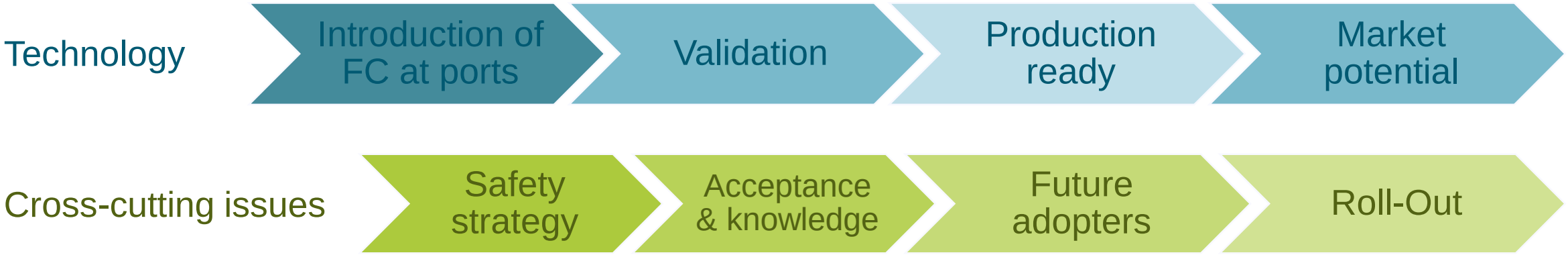

FUEL CELLS AND HYDROGEN JOINT UNDERTAKING

H2 PORTS

General Overview

First application of hydrogen technologies in port handling equipment in Europe

Reach Stacker in MSC Terminal

- FC: 90-120 kW
- 2 years / 5000 h of operation

Mobile HRS

- Hydrogen supply logistics at ports
- Port regulatory framework
- Safety procedures

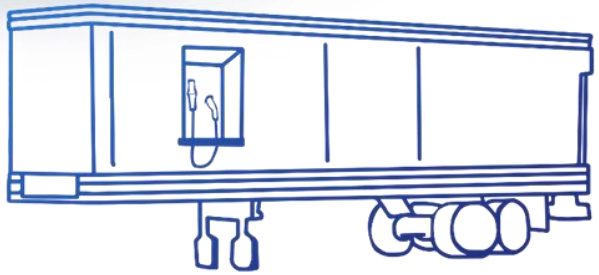

Yard Tractor in Valencia Terminal Europa

- FC: 85 kW
- 2 years / 5000 h of operation

FCH | FUEL CELLS AND HYDROGEN JOINT UNDERTAKING

H2 PORTS

Partners

Coordination: FUNDACIÓN VALENCIAPORT

Public authorities

valenciaport
Autoridad Portuaria de Valencia

Research institutions

Centro Nacional del Hidrógeno

ATENA
FUTURE TECHNOLOGY

End users

msc TERMINAL VALENCIA

GRIMALDI GROUP

Industry

HYSTER-YALE GROUP

BALLARD

enagas

FCH | FUEL CELLS AND HYDROGEN JOINT UNDERTAKING

H2 PORTS

Port of Valencia

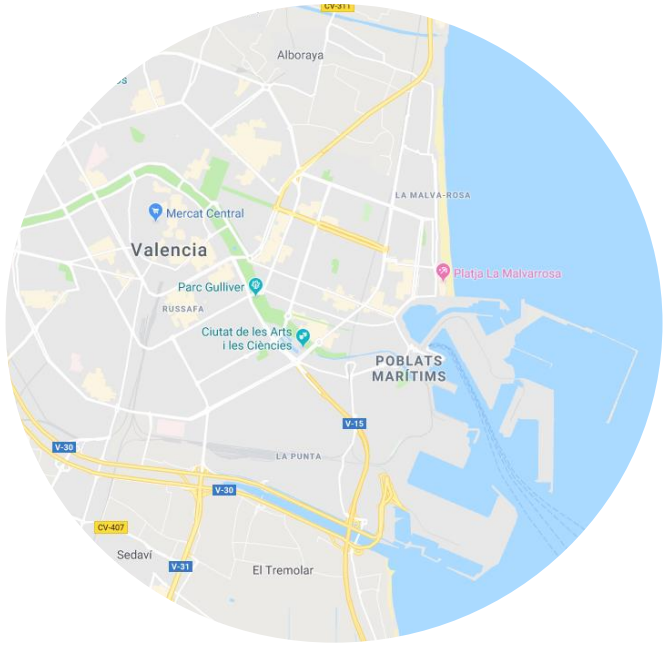

Valencia City : 798,538 hab
Metropolitan area: 1,559,908 hab
Values at 1/1/2018

The port in figures

70.7[1] **M tonnes.** Total Traffic

5.2[1] **M TEU** Container Traffic

0.5[1] **M ITU** RoRo Traffic

31,563[2] direct or indirect jobs

1.82[2] **billion euros** in economic impact (GVA)

[1] Values from 2018
[2] Values from 2016

FUEL CELLS AND HYDROGEN JOINT UNDERTAKING

H2 PORTS

Index

01 Main characteristics

General Overview, Partners, Port of Valencia

02 Use of H_2 at Ports

Port as a Hydrogen Valley, H2Ports: Material Handling

03 Activities

Project Structure, Hydrogen supply, FC Reach Stacker at MSC Valencia, FC 4x4 Yard Tractor at Grimaldi Terminal, Market uptake strategy and Risk Management, Planning

H2 PORTS

Port as a Hydrogen Valley

FUEL CELLS AND HYDROGEN JOINT UNDERTAKING

H2Ports: Material handling

Container terminal

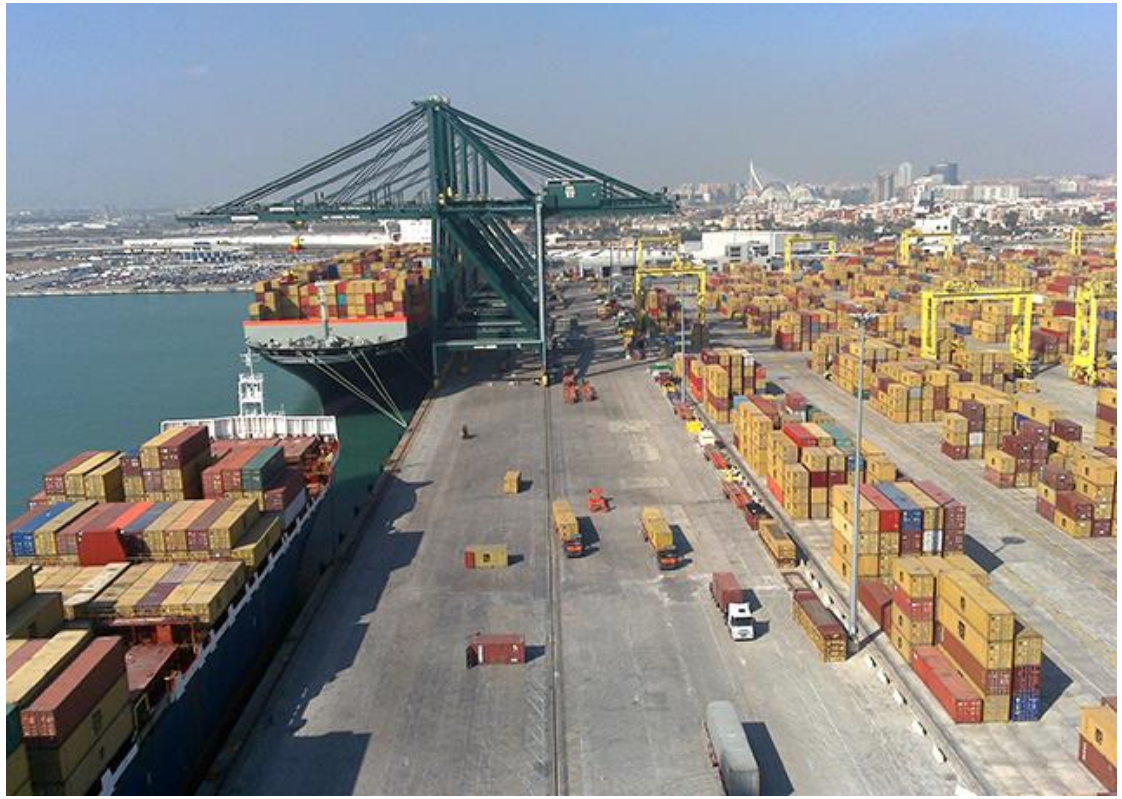

RoRo terminal

FUEL CELLS AND HYDROGEN JOINT UNDERTAKING

H2 PORTS

Index

01 Main characteristics

General Overview, Partners, Port of Valencia

02 Use of H_2 at Ports

Port as a Hydrogen Valley, H2Ports: Material Handling

03 Activities

Project Structure, Hydrogen supply, FC Reach Stacker at MSC Valencia, FC 4x4 Yard Tractor at Grimaldi Terminal, Market uptake strategy and Risk Management, Planning

H2 PORTS

Project Structure

WP1

Project Management.

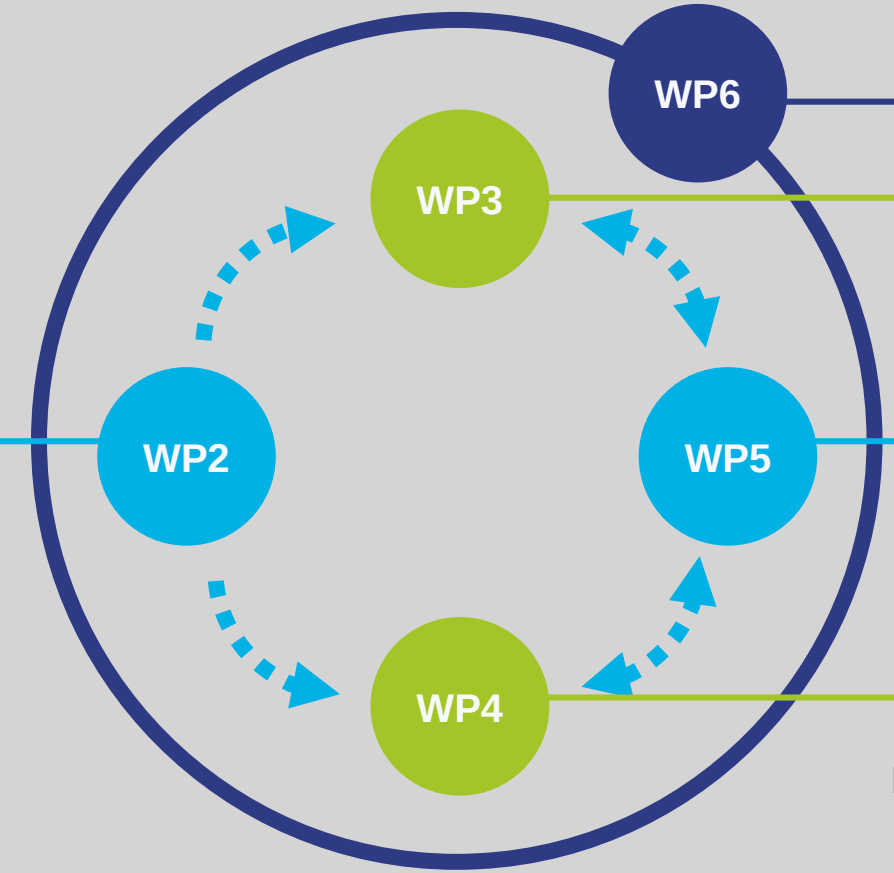

Communication and Dissemination

Implementation of FC and Hydrogen in a Reach Stacker

Hydrogen facilities in ports

Risk Management and Risk uptake strategy

Implementation of FC and Hydrogen in a Yard Tractor

FUEL CELLS AND HYDROGEN JOINT UNDERTAKING

H2 PORTS

Hydrogen supply

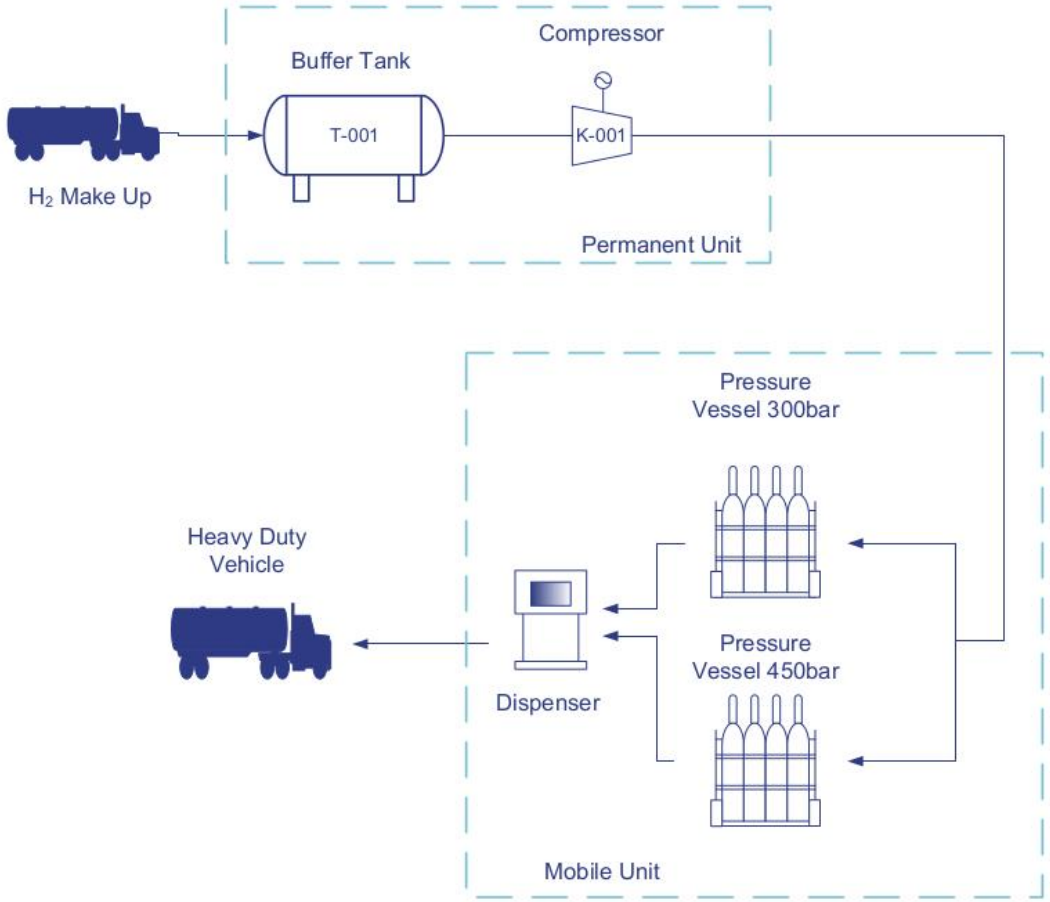

FCHJU funding € 800,000 approx.

National Hydrogen Centre, Fundación Valenciaport, Valencia Port Authority, MSCTV, Hyster-Yale, Grimaldi, ATENA, Enagás

- Mobile hydrogen refuelling station
- Up to 60 kg of H_2 at 350 bar per day
- Hydrogen flow rate up to 3.6 kg/min
- Storage cascade at 300 and 450 bar use in order to save energy

FUEL CELLS AND HYDROGEN JOINT UNDERTAKING

H2 PORTS

Hydrogen supply

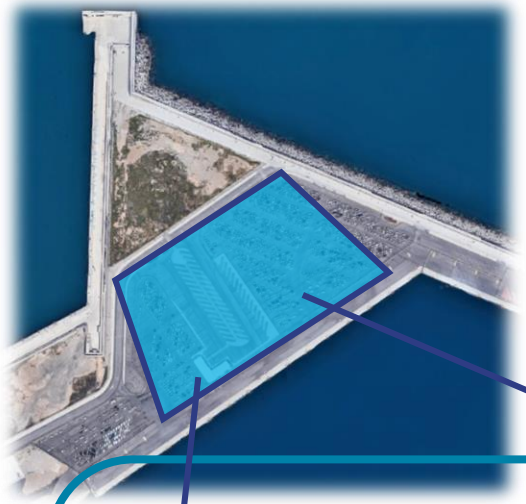

Development of an H2 supply facility to meet the specific needs of machinery in the port environment.

408,65 m²

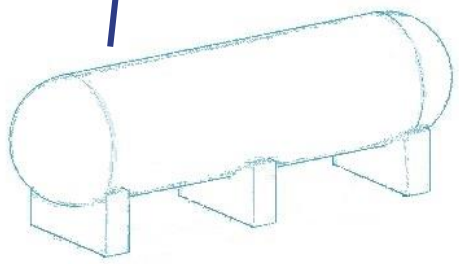

HYDROGEN STORAGE
40 BAR

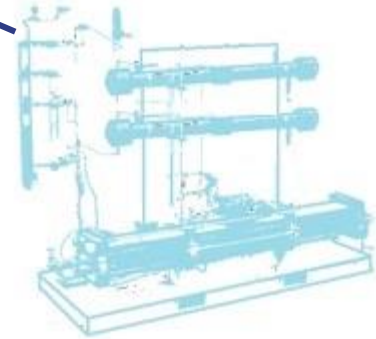

HYDROGEN COMPRESSOR

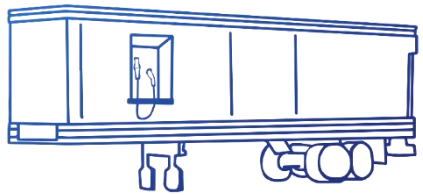

HYDROGEN STORAGE
300 BAR
450 BAR
+ DISPENSER

FUEL CELLS AND HYDROGEN
JOINT UNDERTAKING

H2 PORTS

Hydrogen supply

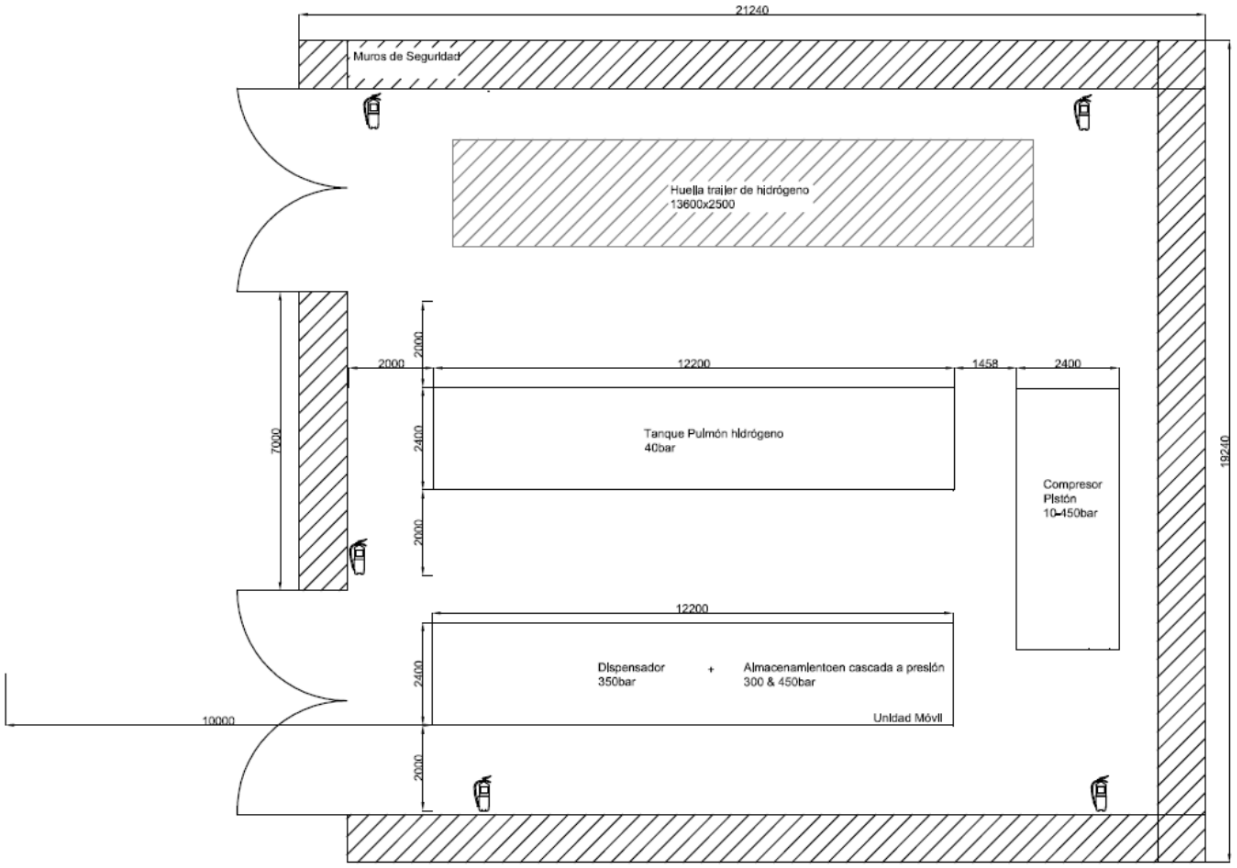

Rules concerning the design of Hydrogen Refuelling Stations

Specific:

- ISO/DIS 19880-1 Gaseous hydrogen -- Fuelling stations
- SAE J2719 Hydrogen Fuel Quality for Fuel Cell Vehicles
- SAE J2799 Hydrogen Surface Vehicle to Station Communications Hardware and Software

Generals:

- Rules that are applicable according to current regulations: storage of chemical products, fire protection, prevention of occupational risks .... etc., to be studied in each case.

FUEL CELLS AND HYDROGEN JOINT UNDERTAKING

H2 PORTS

Hydrogen Storage 40 bar

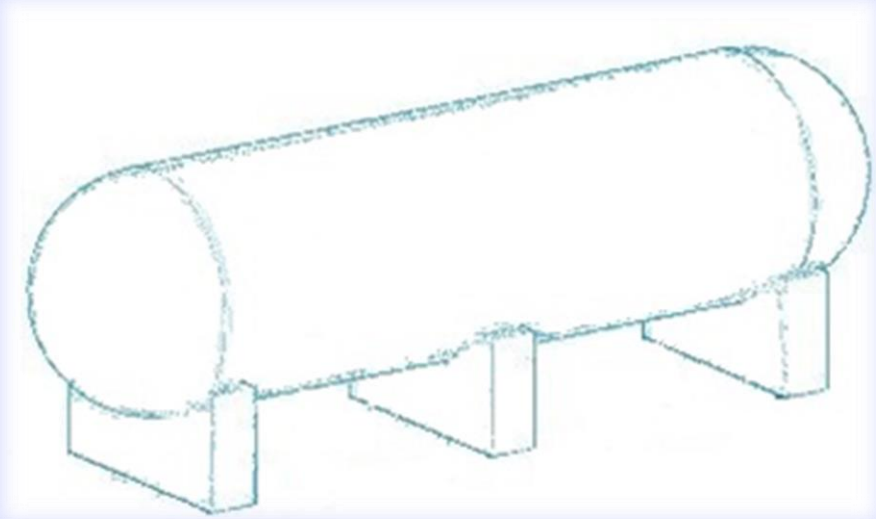

Low pressure hydrogen storage
Horizontal vessel in carbon Steel quality P355N s/EN 10028

Technical specifications

- $Design_{pressure}$: 40bar
- $Test_{pressure}$:60bar
- $Design_{temperature}$: -20 +50C
- Dimmensions: Ø2.450 x 11.510 mm
- Capacity: 50.000 lts

FUEL CELLS AND HYDROGEN JOINT UNDERTAKING

H2 PORTS

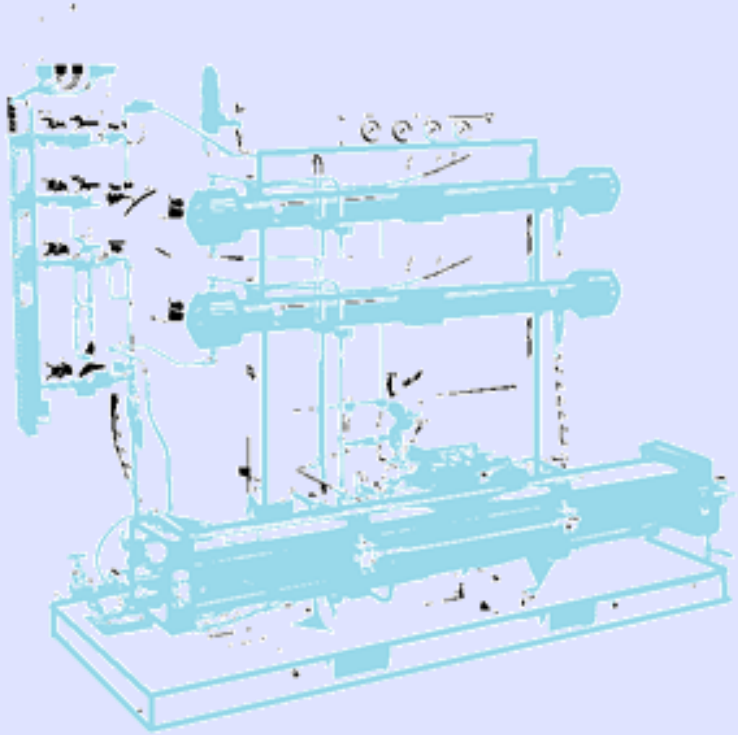

Hydrogen compressor

Hydrogen compressor

Two-stage water-cooled piston compressor with heat exchangers integrated in the system.

Technical specifications.

- Flow Rate: 50 Nm^3/h
- $Inlet_{pressure}$: 5-40 bar
- $Outlet_{pressure}$:300-450 bar
- Electrical power: 22 kW

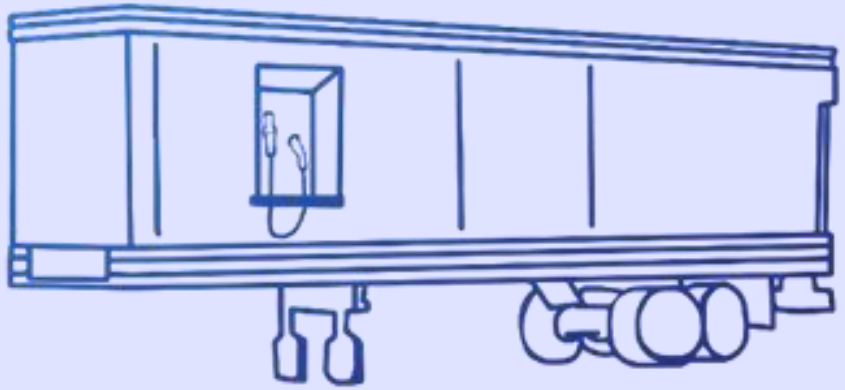

High pressure hydrogen storage and dispenser

Integrated system

Mobile high pressure storage unit, with two stages, at 300 and 450 bar, with integrated dispenser.

Technical specifications

Integrated container storage

- 300 bar
- 450 bar

Hydrogen dispenser according rules

- SAE J2719 Hydrogen Fuel Quality for Fuel Cell Vehicles.
- SAE J2799 Hydrogen Surface Vehicle to Station Communications Hardware and Software.
- SAE J2601 Fuelling Protocols for Light Duty Gaseous Hydrogen Surface Vehicles.

FCH FUEL CELLS AND HYDROGEN JOINT UNDERTAKING

H2 PORTS

FC Reachstacker @ MSC Terminal Valencia

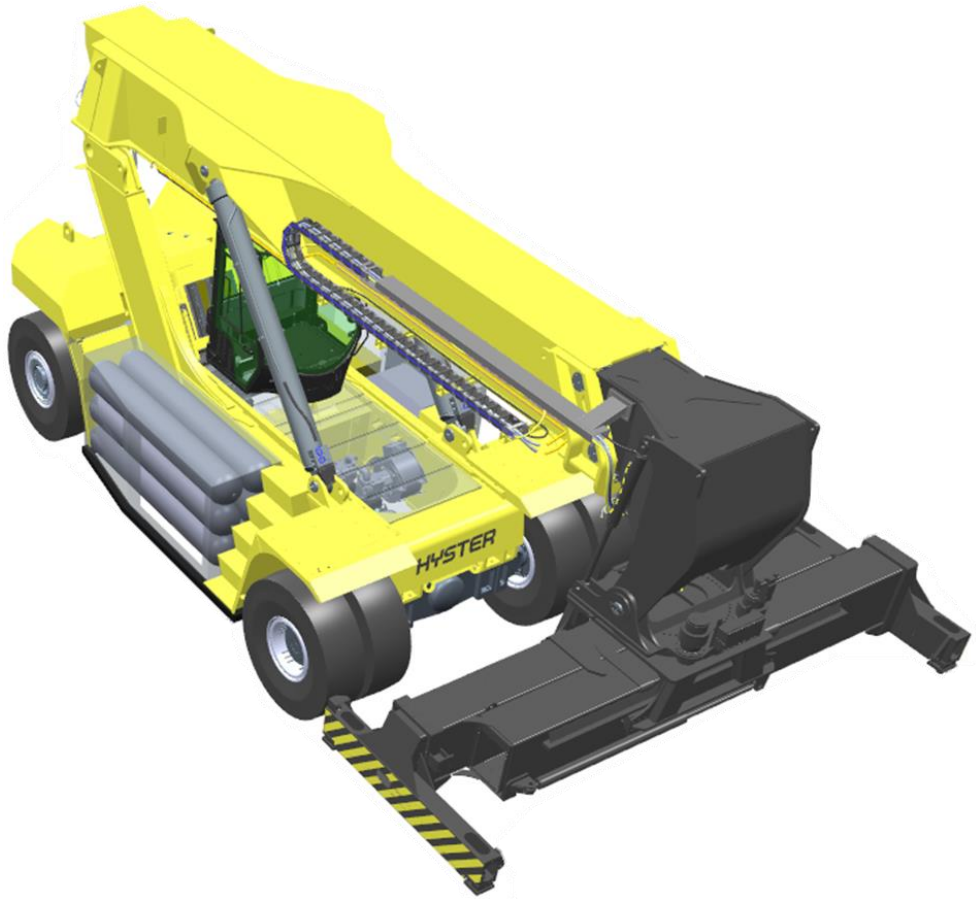

FCHJU funding € 1,400,000 approx.

Hyster-Yale Nederland B.V., MSCTV, Valencia Port Authority, Fundación Valenciaport, National Hydrogen Centre

Expected achievements

- Average CO_2 reduction of 128,000 kg per year per vehicle (3000 h & 16 L/h)
- Lower TCO
- Improved productivity

FUEL CELLS AND HYDROGEN JOINT UNDERTAKING

H2 PORTS

4x4 FC Yard Truck @ Grimaldi Terminal

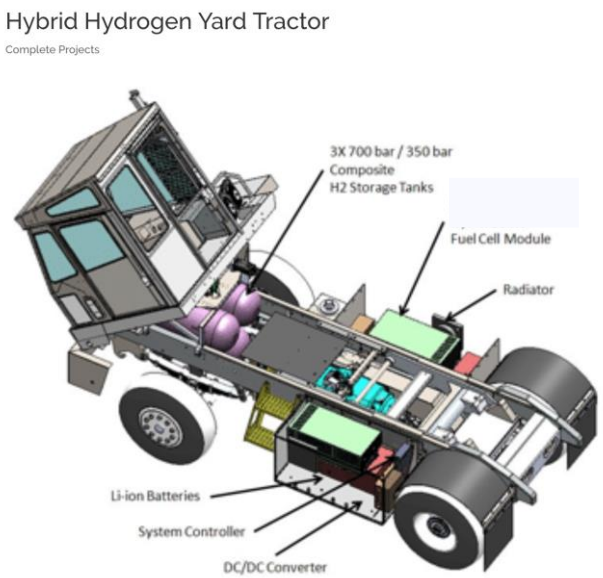

FCHJU funding € 1,100,000 approx.

ATENA, Grimaldi Group, Ballard, National Hydrogen Centre, Fundacion Valenciaport

Development and deployment a 4x4 Yard Tractor equipped with a Fuel Cells and test it in Valencia Terminal Europa (Grimaldi Group). It involves three tasks:

- Design of the new FCEV YT
- Assembling of new components in the YT
- Testing and Piloting of the FCEV YT in Valencia, Spain

FUEL CELLS AND HYDROGEN JOINT UNDERTAKING

H2 PORTS

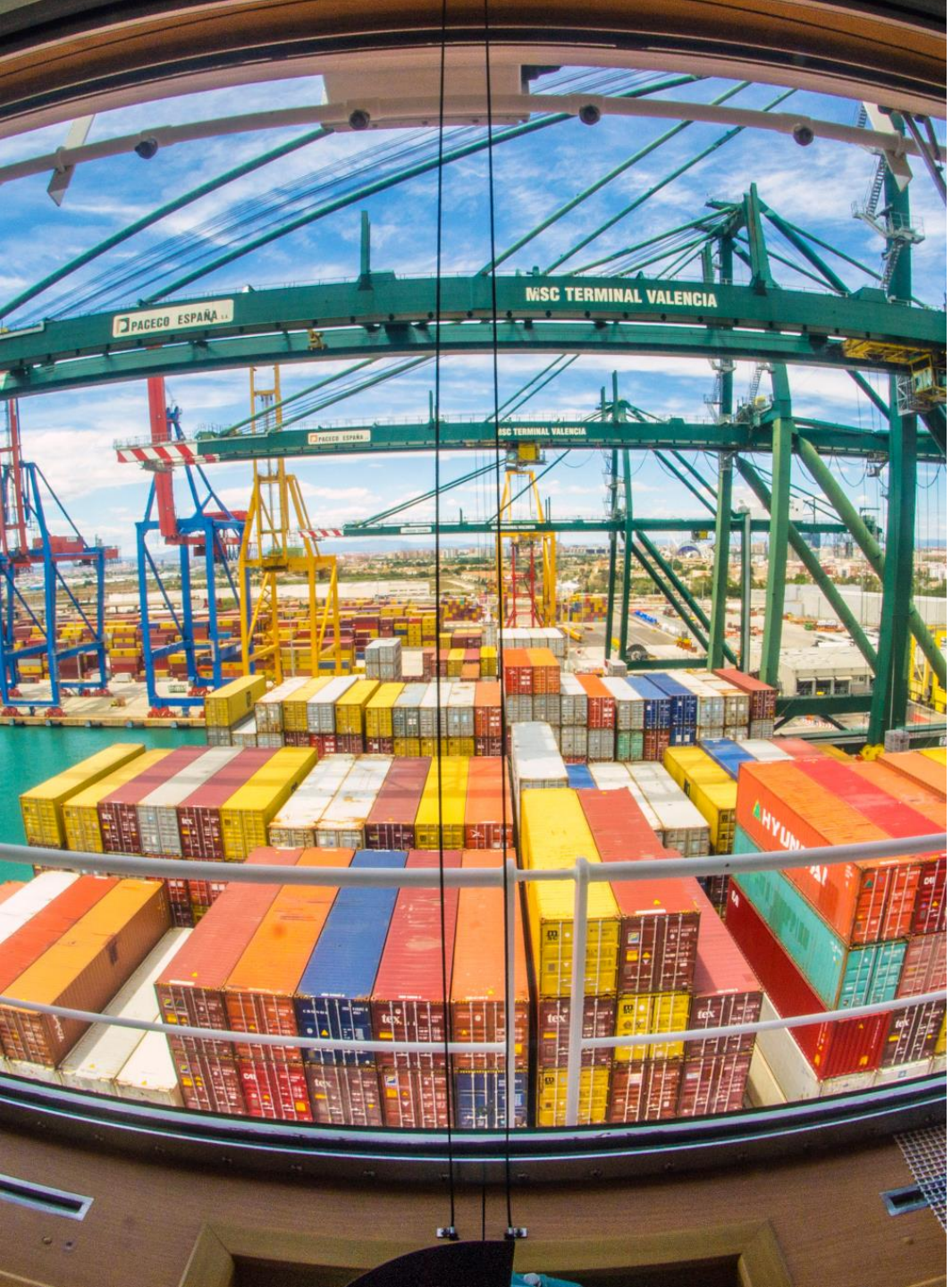

Market uptake strategy and risk management

Objectives

Analysis of the technical and financial feasibility of the use Hydrogen Fuel Cells in ports machinery.

Logistics

Define the most adequate logistic chain for supplying hydrogen. Estimate potential agregated demand

Regulatory

Analyse all aspects related to safety. Study the permiting process

Market uptake

Assess the financial feasibility. Propose a path for the introduction of FC in the port maritime sector. Define the most probable implementing scenarios.

FCH | FUEL CELLS AND HYDROGEN JOINT UNDERTAKING

H2 PORTS

Planning

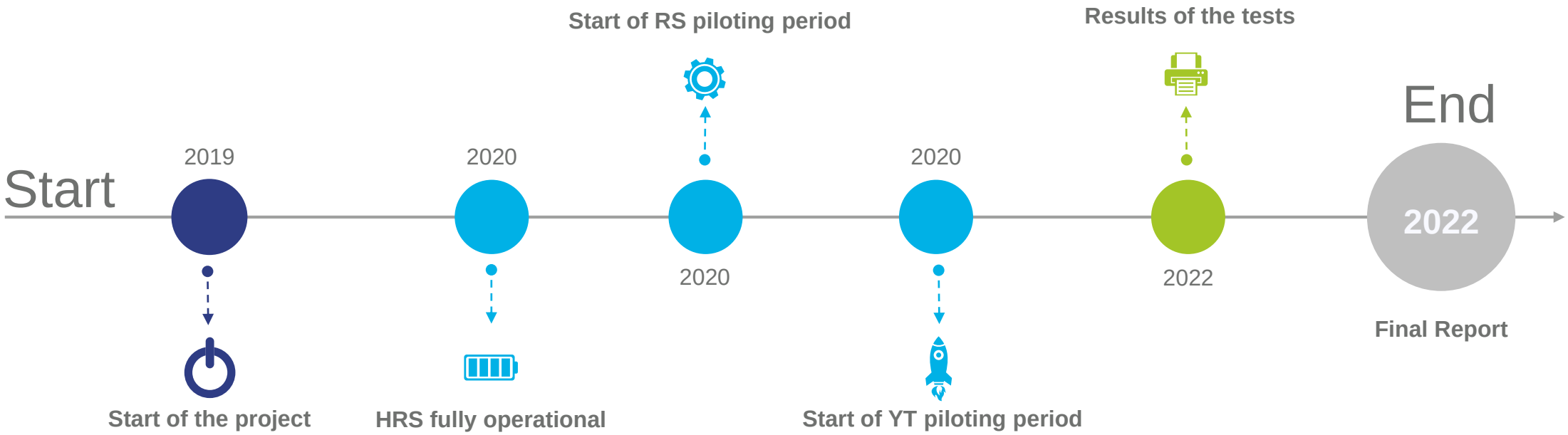

FUEL CELLS AND HYDROGEN JOINT UNDERTAKING

H2 PORTS

Thank you!

H2 PORTS

Funded by:

FCH | FUEL CELLS AND HYDROGEN JOINT UNDERTAKING

Partners:

FUNDACIÓN VALENCIAPORT

valenciaport Autoridad Portuaria de Valencia

GRIMALDI GROUP

msc TERMINAL VALENCIA S.A.U

BALLARD®

HY HYSTER-YALE GROUP

ATENA FUTURE TECHNOLOGY

Centro Nacional del Hidrógeno

enagas